model BP8W

White Back Panel

FEATURES & BENEFITS

OPTIONS

For more information, visit www.hawsco.com or call (888) 640-4297.

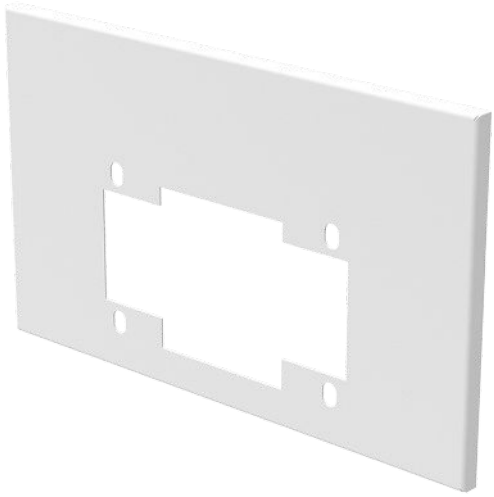

SPECIFICATIONS

Model BP8W is a versatile and decorative back panel for Model 1311 that increases location visibility of the fountain and also helps protect wall from inadvertent splash. It is a 15″ x 9″ (38 x 23 cm) stainless steel panel with powder-coated white finish.

APPLICATIONS

DISCLAIMER: Continued product improvements make specifications subject to change without notice. Check www.hawsco.com for the latest product information and updates.

THIS DOCUMENT IS TRUE AND CORRECT AT TIME OF PUBLICATION. CONTINUED PRODUCT IMPROVEMENTS MAKE SPECIFICATIONS AND MEASUREMENTS SUBJECT TO CHANGE WITHOUT NOTICE.

DUAL FOUNTAIN
SHOWN FROM REAR

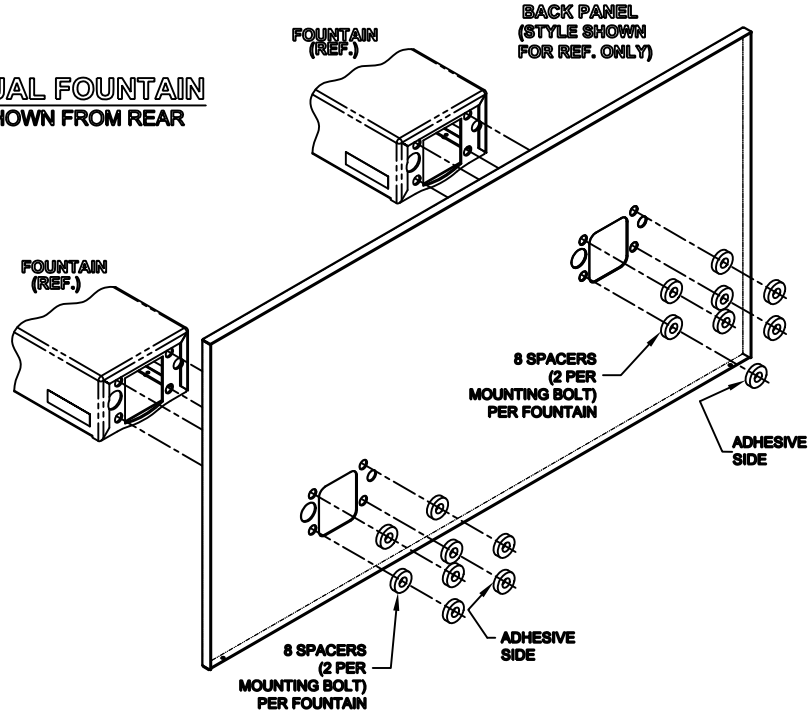

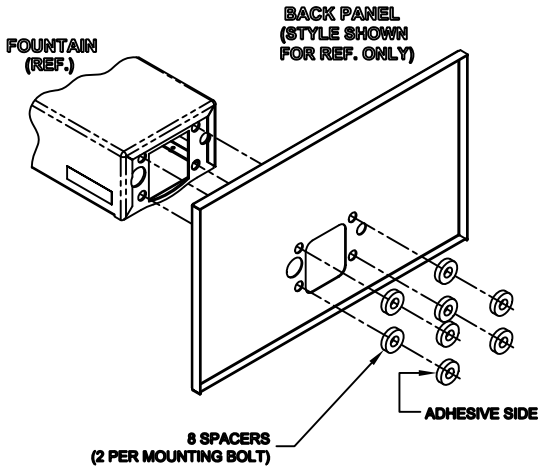

SINGLE FOUNTAIN
SHOWN FROM REAR

NOTES:

1. ON ALL BACK PANEL MODELS, SPACERS ARE NOT USED WHEN A MOUNTING FRAME IS USED EXCEPT AS SPECIFIED IN NOTE 2
2. INDICATED SPACERS ARE USED WITH MOUNTING FRAME (DUAL ADJUSTABLE)

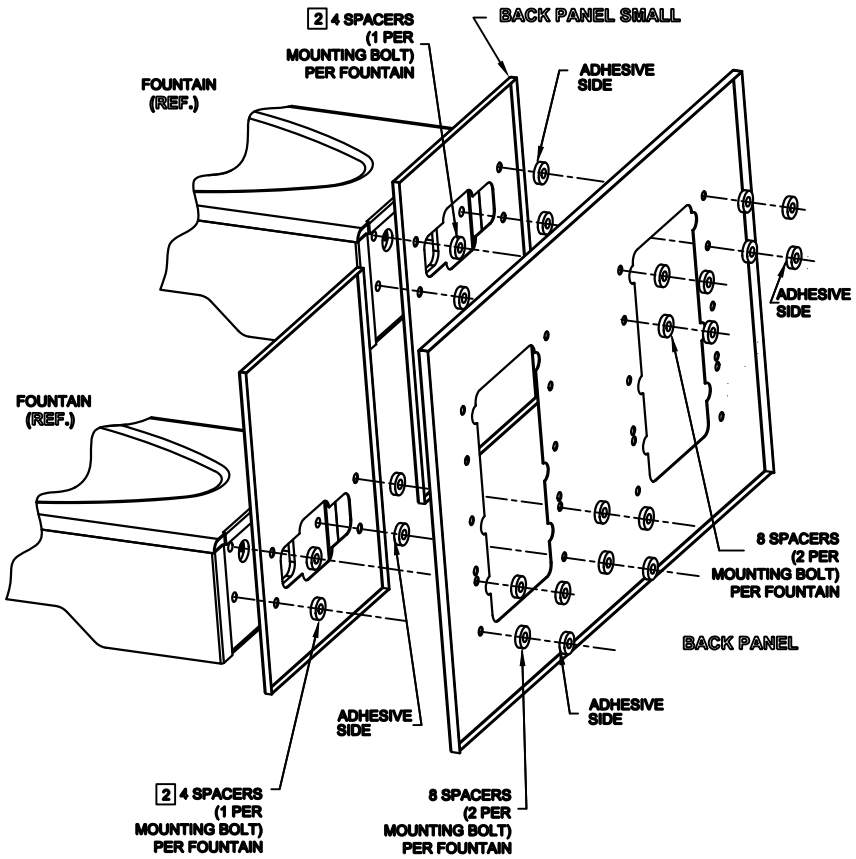

DUAL FOUNTAIN ADJUSTABLE
SHOWN FROM REAR

Haws®
1455 KLEPPE LANE
SPARKS, NEVADA 89431
(775) 359-4712 FAX (755) 359-7424
E-MAIL: HAWS@HAWSCO.COM
WEBSITE: WWW.HAWSCO.COM

ECN NO.	REVISED PER ECN: 4595	BY: HM	MODEL(S)
DRAWN: CL	DATE: 10/28/02	CHK'D.:	BACK PANEL SPACER INSTRUCTIONS
APPROVED:	DATE:		

PART NUMBER	0002082219
DRAWING NO.	08292C00
REV	5
SCALE: 1:10	DRAWING TYPE: INSTALLATION
SIZE: A	SHEET 1 OF 1

©2011 Haws Corporation - All Rights Reserved. HAWS® and other trademarks used in these materials are the exclusive property of Haws Corporation.