INSTALLATION, OPERATION & MAINTENANCE INSTRUCTIONS

1455 Kleppe Lane ◆Sparks, NV 89431-6467 ◆(775) 359-4712 ◆Fax (775) 359-7424
E-mail: Info@hawsco.com ◆ website: www.hawsco.com

No. 0510001209 (2)

Model 1117LHO/1117LHO2 Drinking Fountain

NOTE TO INSTALLER: Please leave this information with the Maintenance Department.

CAUTION! Prior to making any electrical connections, verify with a voltmeter that power from the service panel is **off**.

LIMITED WARRANTY

HAWS warrants that all of its products are guaranteed against defective material or poor workmanship for a period of **one year from the date of shipment.** The foregoing notwithstanding, *HAWS* warrants certain specific products or components thereof for an adjusted period. A list of these excepted products and components and a description of their respective warranty terms may be found here: www.hawsco.com/warranty. *HAWS*' liability under this warranty shall be discharged by furnishing without charge F.O.B. *HAWS* factory any goods, or part thereof, which shall appear to the Company upon inspection to be of defective material or not of first-class workmanship, provided that a claim is made in writing to Company within a reasonable period after receipt of the product. Where claims for defects are made, the defective part or parts shall be delivered to the Company, prepaid, for inspection. *HAWS* shall not be liable for the cost of repairs, alterations or replacements, or the labor required to implement them, or for any expense connected therewith made by the owner or owner's agents, except upon written authority from *HAWS*. *HAWS* shall not be liable for any damages caused by defective materials or poor workmanship, except for replacements, as provided above. Buyer agrees that *HAWS* has made no other warranties either express or implied in addition to those above stated, except that of title with respect to any of the products or equipment sold hereunder and that *HAWS* shall not be liable for general, special, incidental, or consequential damages claimed to arise under the contract of sale.

Equipment manufactured by HAWS is warranted to function if installation and maintenance instructions provided are adhered to. The units also must be used for the purpose for which they were intended. Any HAWS emergency equipment is intended to supplement first-aid treatment. Due to widely varying conditions, HAWS cannot guarantee that the use of this emergency equipment will prevent serious injury or the aggravation of existing or prior injuries.

EXCEPT AS EXPRESSLY STATED HEREIN, HAWS HEREBY DISCLAIMS ALL WARRANTIES, WHETHER EXPRESS OR IMPLIED, ARISING BY LAW OR OTHERWISE, INCLUDING WITHOUT LIMITATION, ANY IMPLIED WARRANTIES OF MERCHANTABILITY AND FITNESS FOR A PARTICULAR PURPOSE. THIS WARRANTY MAY NOT BE MODIFIED OR EXTENDED WITHOUT THE WRITTEN CONSENT OF HAWS. REMEDIES AND REPLACEMENTS STATED HEREIN ARE EXCLUSIVE. IN NO EVENT SHALL HAWS BE LIABLE FOR ANY SPECIAL, PUNITIVE, CONSEQUENTIAL OR INCIDENTAL DAMAGES TO ANY PERSON INCLUDING BUT NOT LIMITED TO DAMAGES FOR LOSS OF USE OR PROFITS, SUBSTITUTE PRODUCTS OR COSTS, PROPERTY DAMAGE, OR OTHER MONETARY LOSS.

SHOULD YOU EXPERIENCE DIFFICULTY WITH THE INSTALLATION OF THIS MODEL PLEASE CALL:

TECHNICAL SUPPORT: 1-800-766-5612

FOR CUSTOMER SERVICE: 1-888-640-4297

RECOMMENDED TOOLS: Hack saw, pipe joint sealant, screwdriver, level, 12" adjustable wrench, 10" pipe wrench, 5/64“ hex key wrench, 9/16”, 1/2", 7/16” socket wrench or open-end wrench.

LOCATION OF UNIT: The Model 1117LHO/1117LHO2 Drinking Fountain is a wheelchair accessible drinking facility. The height dimensions shown, meet current ADA requirements. When installing this unit, local, state or federal codes should be adhered to. If height other than shown is required, then dimensions must be adjusted accordingly.

SUPPLY LINE: The minimum recommended line size is 1/2“IPS with 30-90 psi (2-6 ATM) flowing pressure. Where sediment or mineral content is a problem, an inlet filter is recommended.

PLUMBING CONNECTIONS: Inlet is 3/8” O.D. push-in type fitting. Waste outlet is female 1-1/4” NPT.

ELECTRICAL CONNECTIONS: **Drinking Fountain may be mounted on external wall of building provided transformer shall be mounted inside the wall and protected from water as shown on RKHO Series O&M details (page 8) per NEC/CEC and local code.**

Sensor(s):

1117LHO with 1RKHO.H: 100-277VAC x 9VDC, 50-60Hz, 5 Watts.

1117LHO2 with 2RKHO.H: 100-277VAC x 9VDC, 50-60Hz, 5 Watts.

MAINTENANCE: Periodically clean out the supply line Y-strainer (and strainer located inside push button valve on Model 1117LHO). Refer to 5874 Series Valve Manual for more information.

INSTALLATION PROCEDURE

GENERAL NOTES:

1. **For all plastic push-in type fitting connections, only connect NSF-61 copper or plastic tubing. Stainless steel or glass tubing is not recommended. The following assembly instructions must be followed to ensure a watertight connection:**
   a. **Cut tubing square and clean.**
   b. **Mark from end of tube the length of insertion (See table below).**
   c. **Push tube into the fitting until it bottoms out.**
   d. **To remove, depress collet and pull tubing out.**

Tube Sizes	O.D. Tolerance	Insertion Depth
3/8”	±.005”	3/4”

INSTALLATION PROCEDURE…

STEP 1: Thoroughly flush supply line to remove all foreign matter. Connect 1/2” IPS supply screwdriver-stop (not supplied). Install supply 3/8” O.D. tubing (supplied), between screwdriver-stop and supplied Y-strainer. (Cut tubing to proper length and follow general notes for proper connection procedures for push-in type fittings). Connect 3/8” O.D. tube between supplied tee and fountains and solenoid valve outlet(s) (if not already connected). See installation drawings (pages 6 & 7) towards the end of this manual for supply plumbing and wiring details.

STEP 2: Open screwdriver-stop **wide open** while checking for leaks at all connections. Also, check waste for leaks.

STEP 3: **Model 1117LHO (only): 5874 Series Valve –** Adjust bubbler stream height using a small flat-head screwdriver inserted through a hole in the center of the push button for increased flow turn clockwise and for decreased flow turn counterclockwise. If flow problems arise, see troubleshooting guide for additional instructions to correct problem. Bubbler stream may lower during short break-in period. Set initial stream height a little high to minimize or eliminate the need for break-in period readjustment.

Model 1117LHO/1117LHO2: 5867 Valve Pressure Regulator – Adjust bubbler stream height using the black pressure regulator mounted inside bracket that has HO sensor unit, by loosening the locknut and rotating the knob clockwise to increase flow or counterclockwise to reduce flow. Tighten the locknut and check flow height. Repeat these steps until the bubbler flow height is correct.

STEP 4: 1RKHO.H & 2RKHO.H Transformer and Sensor Setup: Refer to the 1RKHO.H & 2RKHO.H manuals for instructions (supplied).

MAINTENANCE

STEP 1: Periodically clean out the supply line Y-strainer and the strainer located in the push button valve body on Model 1117LHO (Refer to 5874 Series Valve Manual for more information).

TROUBLESHOOTING

PROBLEM	REPAIR CHECKLIST
1. Insufficient bubbler flow.	1a. Check that inlet screwdriver stop valve is wide open. Turn counter-clockwise.
	b. Verify minimum 30 psi flowing supply pressure.
	c. Clean strainer. See 5874 Series Valve Manual
	d. Adjust valve to increase flow. Use front adjust screw or see 5874 Series Valve Manual.

For more information about Haws products, see our website: www.hawsco.com

© 2023 Haws® Corporation – All Rights Reserved
HAWS® and other trademarks used in these materials are the exclusive property of Haws Corporation.

THIS DOCUMENT IS TRUE AND CORRECT AT TIME OF PUBLICATION. CONTINUED PRODUCT IMPROVEMENTS MAKE SPECIFICATIONS AND MEASUREMENTS SUBJECT TO CHANGE WITHOUT NOTICE.

	ITEM	DESCRIPTION	PART NO.
1	1	SPANNER WRENCH	0006983506
1	2	BUTTON, PUSH, FLANGED, ASSY	PBA6
1	3	VALVE REPAIR KIT	VRK5874
	4	STRAINER ASSY	6462
	5	BUBBLER HEAD	5703M
	6	TRAP LOW PROFILE	0005982900
	7	BOTTOM PLATE	PBM1107
	8	SOLENOID VALVE	VRKHO5
	9	SENSOR	VRKHO6
	10	TRANSFORMER	VRKHO8
	11	PRESSURE REGULATOR	5867
	12	Y-STRAINER	6433
	13	BACK PANEL	0004023590
	14	BACK PANEL SMALL	0004023587
**	15	MOUNTING PLATE	6717
	16	KEY HEX F/PINNED HEX	0002981127

** REQUIRED - S0LD SEPARATELY

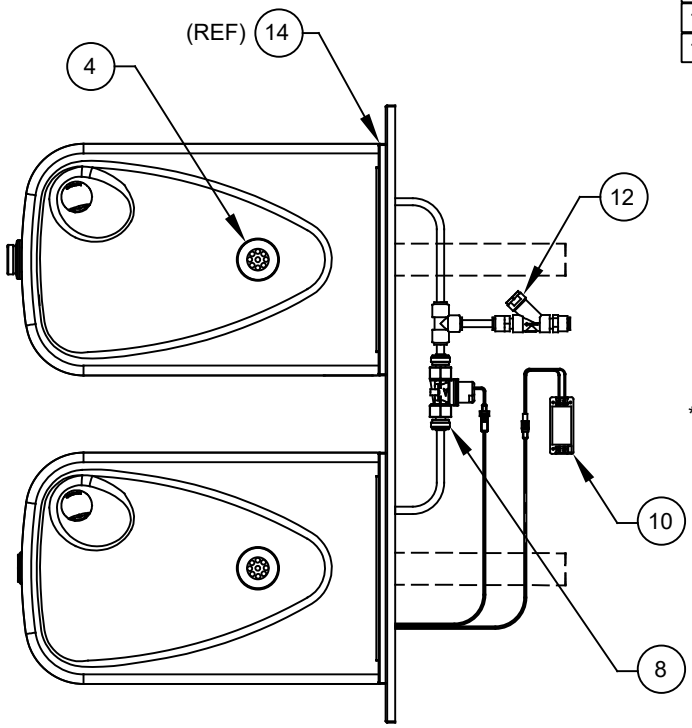

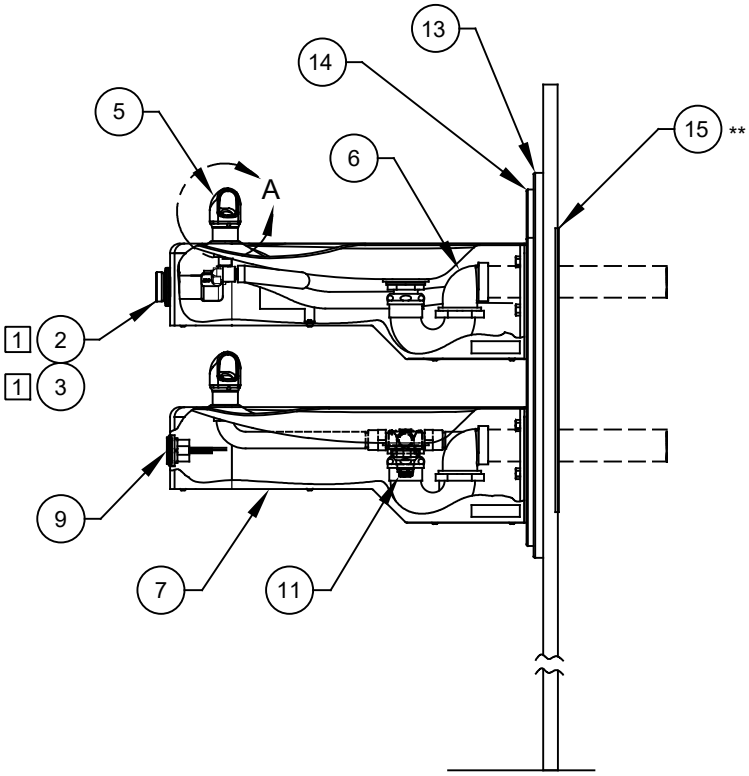

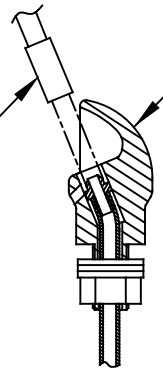

DETAIL A
ROTATED 90° INTO VIEW

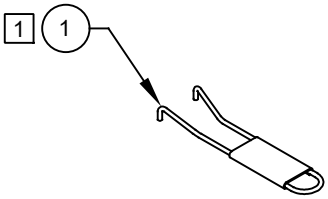

NOTES:

1 ITEMS 1, 2 AND 3 ARE ONLY USED ON MODEL 1117LHO.

2 ENSURE TUBE IS DISCONNECTED FROM PUSH BUTTON VALVE BODY PRIOR TO REMOVAL. APPLY ONE DROP OF LOCTITE 222MS TO NOZZLE THREADS PRIOR TO FASTENING BACK ONTO BUBBLER HEAD. RE-ATTACH TUBE TO VALVE.

1117LHO SHOWN
1117LHO2 ON SHEET 2

PARTS BREAKDOWN

Haws®
1455 KLEPPE LANE
SPARKS, NEVADA 89431
(775) 359-4712 FAX (775) 359-7424
E-MAIL: HAWS@HAWSCO.COM
WEBSITE: WWW.HAWSCO.COM

ECN NO.	REVISED PER	BY	MODEL(S)	PART NUMBER
5712	ECN: 5893	FV	1117LHO/1117LHO2	0510001209
DRAWN FV	DATE 07/21/21	CHKD KM		REVISION 2
APPROVED FV	DATE 09/06/23		SCALE: 1:1 / DRAWING TYPE: PARTS BREAKDOWN / SIZE: A	SHEET 1 OF 2

WHEN ORDERING PARTS PLEASE SPECIFY MODEL NUMBER.

©2023 Haws Corporation - All Rights Reserved
HAWS ® and other trademarks used in these materials are the exclusive property of Haws Corporation.

THIS DOCUMENT IS TRUE AND CORRECT AT TIME OF PUBLICATION. CONTINUED PRODUCT IMPROVEMENTS MAKE SPECIFICATIONS AND MEASUREMENTS SUBJECT TO CHANGE WITHOUT NOTICE.

ITEM	DESCRIPTION	PART NO.

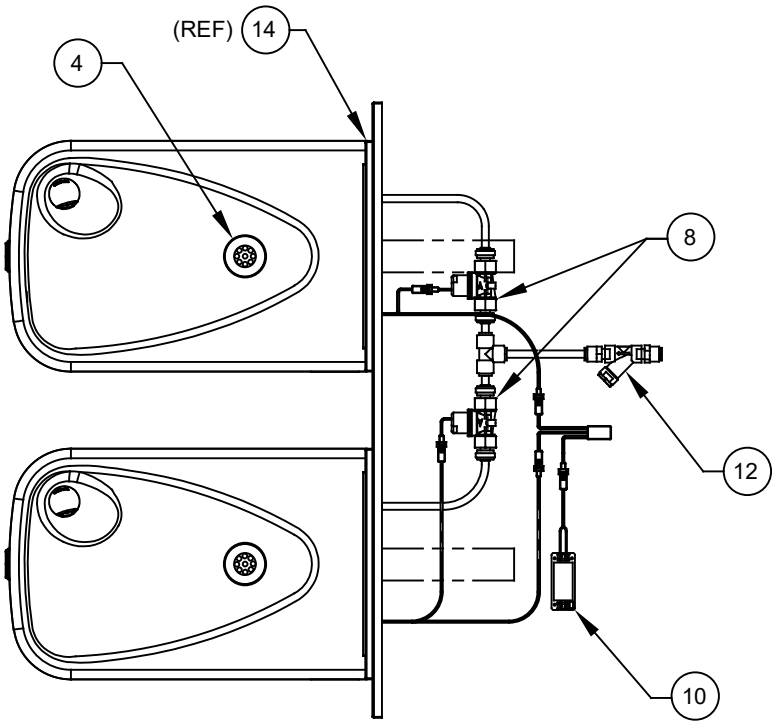

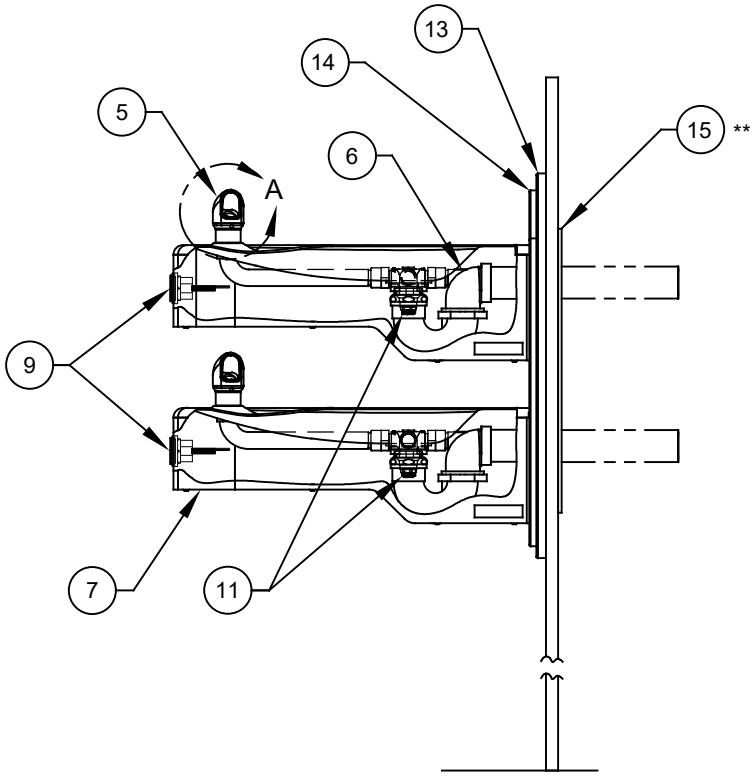

1117LHO2 SHOWN
1117LHO ON SHEET 1

PARTS BREAKDOWN

1455 KLEPPE LANE
SPARKS, NEVADA 89431
(775) 359-4712 FAX (775) 359-7424
E-MAIL: HAWS@HAWSCO.COM
WEBSITE: WWW.HAWSCO.COM

WHEN ORDERING PARTS PLEASE SPECIFY MODEL NUMBER.

ECN NO.	REVISED PER	BY	MODEL(S)	PART NUMBER
5712	ECN: 5893	FV	1117LHO/1117LHO2	0510001209
DRAWN FV	DATE 07/21/21	CHKD KM		REVISION 2
APPROVED FV	DATE 09/06/23		SCALE: 1:1 / DRAWING TYPE: PARTS BREAKDOWN / SIZE: A	SHEET 2 OF 2

©2023 Haws Corporation - All Rights Reserved
HAWS ® and other trademarks used in these materials are the exclusive property of Haws Corporation.

THIS DOCUMENT IS TRUE AND CORRECT AT TIME OF PUBLICATION. CONTINUED PRODUCT IMPROVEMENTS MAKE SPECIFICATIONS AND MEASUREMENTS SUBJECT TO CHANGE WITHOUT NOTICE.

NOTES:

1. HOLD ROUGH-IN DIMENSIONS ± 1/8" (3.2MM).
2. WHEN INSTALLING THIS UNIT, LOCAL, STATE, OR FEDERAL CODES SHOULD BE ADHERED TO. FOR INSTALLATION HEIGHTS OTHER THAN SHOWN, DIMENSIONS MARKED (*) MUST BE ADJUSTED ACCORDINGLY.

[3] REFER TO 5874 SERIES OPERATION AND MAINTENANCE MANUAL FOR PUSH BUTTON AND VALVE INSTALLATION/MAINTENANCE INSTRUCTIONS.

[4] ROUGH IN DIMENSIONS FOR FOUNTAIN HEIGHTS:

CHILD WHEELCHAIR HEIGHT: SEE SHT 3 FIG 1
- WASTE: 26-1/4" (667mm)
- SUPPLY: 26-1/8" (664mm)
- MOUNTING HOLE: 24-13/16" (630mm)
- FOUNTAIN: 24" (610mm)
- BUBBLER: 29-7/8" (756mm)

ADULT WHEELCHAIR HEIGHT: SEE SHT 3 FIG 2
- WASTE: 29-1/4" (743mm)
- SUPPLY: 29-1/8" (740mm)
- MOUNTING HOLE: 27-13/16" (706mm)
- FOUNTAIN: 27" (686mm)
- BUBBLER: 32-7/8" (832mm)

STANDING ADULT HEIGHT: SEE SHT 3 FIG 3
- WASTE: 34-3/4" (883mm)
- SUPPLY: 34-5/8" (879mm)
- MOUNTING HOLE: 33-5/16" (846mm)
- FOUNTAIN: 32-1/2" (826mm)
- BUBBLER: 38-3/8" (972mm)

5. REFER TO MODEL 1117LHO INSTALLATION DRAWING SHEET 3 OF 3 (ON HAWS WEBSITE **WWW.HAWSCO.COM**) FOR PERMISSABLE BOWL MOUNTING PATTERNS. **TWO WHEELCHAIR HEIGHT FOUNTAINS CANNOT BE MOUNTED SIDE BY SIDE PER ANSI A117.1.**

[6] REFER TO 1RKHO OR 2RKHO SERIES OPERATION INSTRUCTONS FOR TRANSFORMER AND SENSOR SETUP.

NOTES CONTINUED ON SHEET 3 OF 3

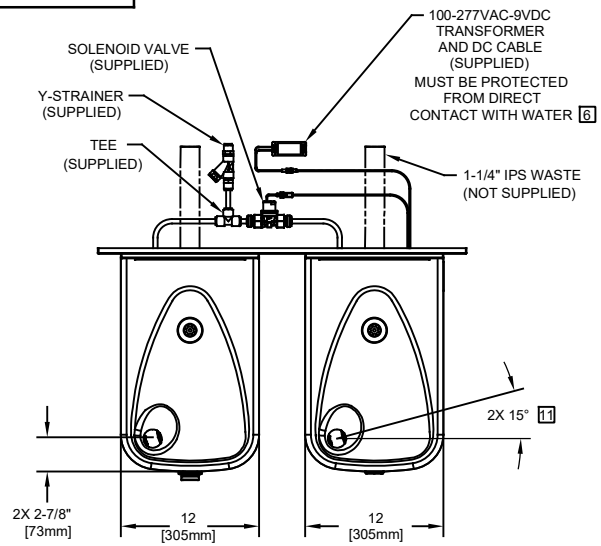

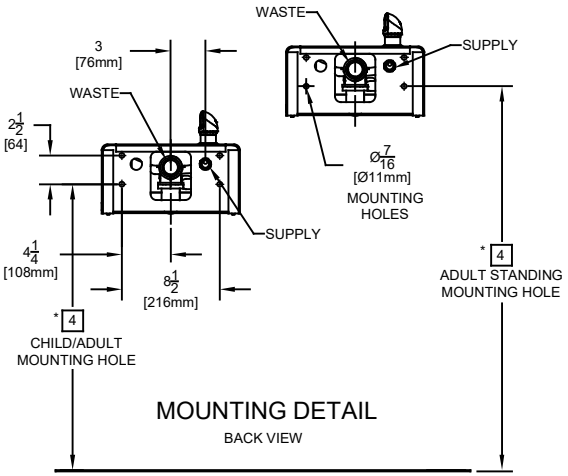

MOUNTING DETAIL

BACK VIEW

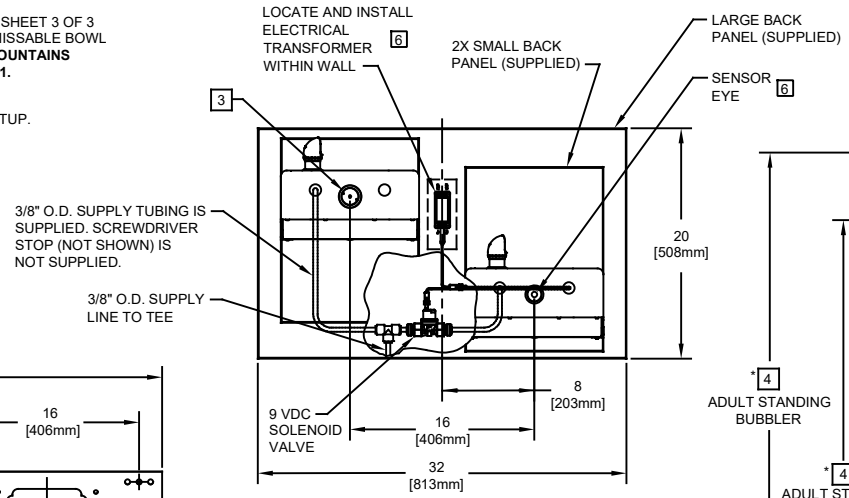

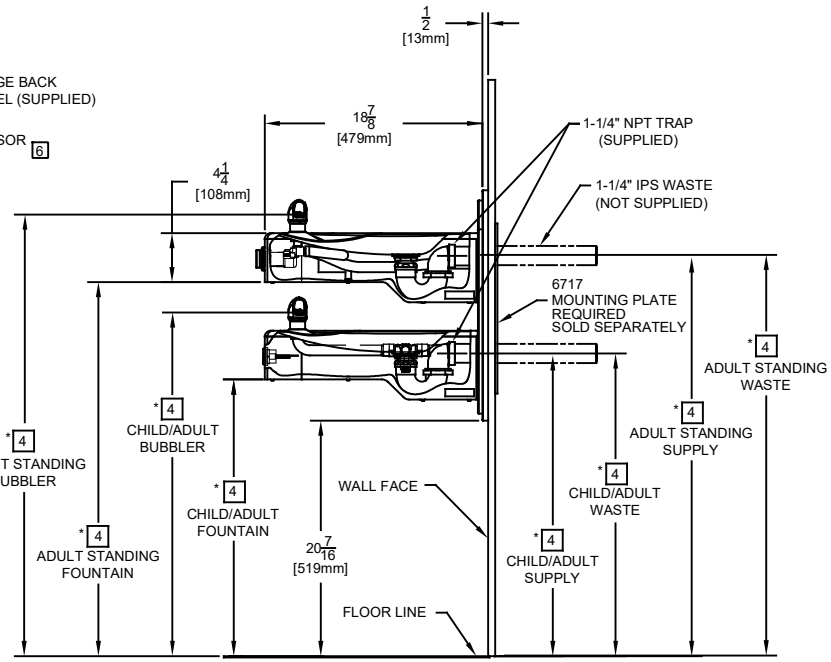

MODEL 1117LHO SHOWN
MODEL 1117LHO2 ON SHEET 2
(ROUGH-IN DIMENSIONS APPLY TO BOTH MODELS)

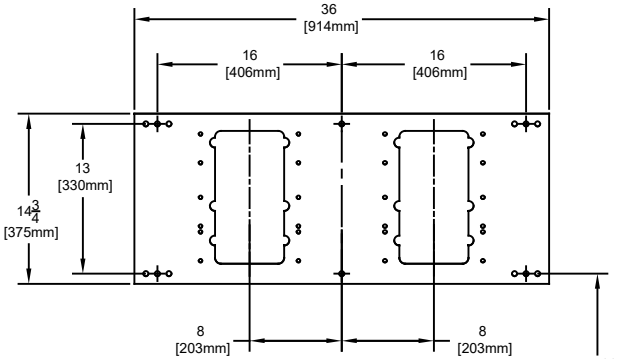

6717 MOUNTING PLATE

MUST BE INSTALLED BEFORE FINISH WORK
THIS PLATE IS REQUIRED - SOLD SEPARATELY.

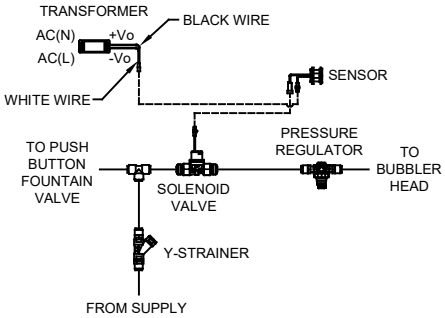

SENSOR WIRING / SUPPLY PLUMBING SCHEMATIC

Haws®
1455 KLEPPE LANE
SPARKS, NEVADA 89431
(775) 359-4712 FAX (775) 359-7424
E-MAIL: HAWS@HAWSCO.COM
WEBSITE: WWW.HAWSCO.COM

ECN NO. 5712	REVISED PER ECN: 5893	BY: FV	MODEL(S) 1117LHO/1117LHO2	PART NUMBER 0510001209.D
DRAWN: FV	DATE: 07/21/21	CHK'D.: KM		REVISION 2
APPROVED: FV	DATE: 09/06/23		SCALE: 1:2 / DRAWING TYPE: INSTALLATION / SIZE: A	SHEET 1 OF 3

©2023 Haws Corporation - All Rights Reserved. HAWS® and other trademarks used in these materials are the exclusive property of Haws Corporation.

THIS DOCUMENT IS TRUE AND CORRECT AT TIME OF PUBLICATION. CONTINUED PRODUCT IMPROVEMENTS MAKE SPECIFICATIONS AND MEASUREMENTS SUBJECT TO CHANGE WITHOUT NOTICE.

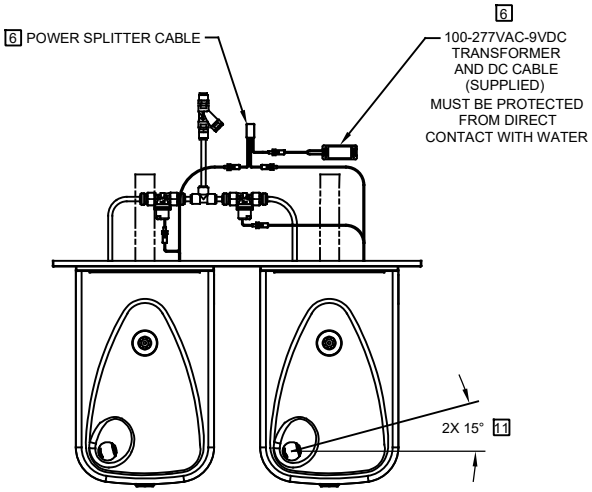

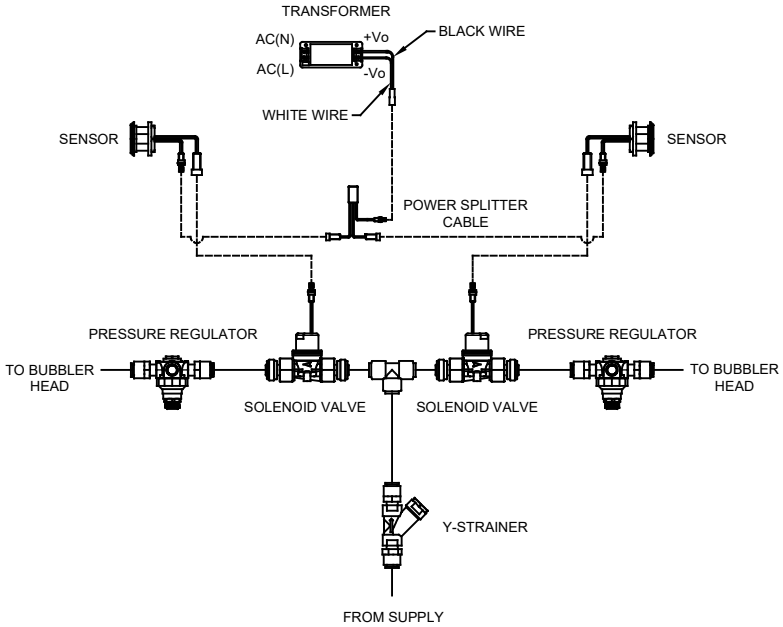

SENSOR WIRING / SUPPLY PLUMBING SCHEMATIC

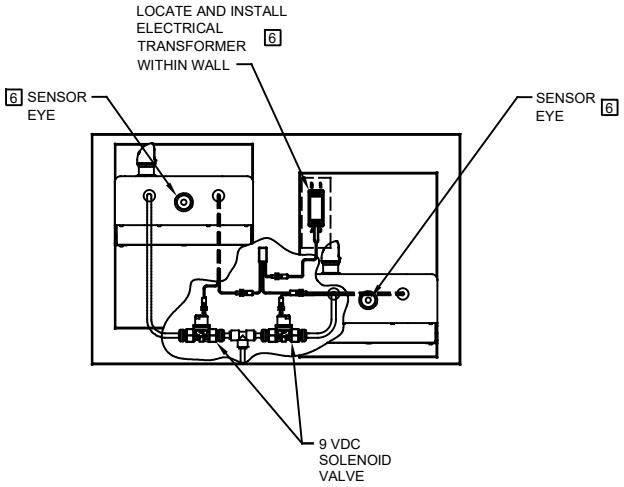

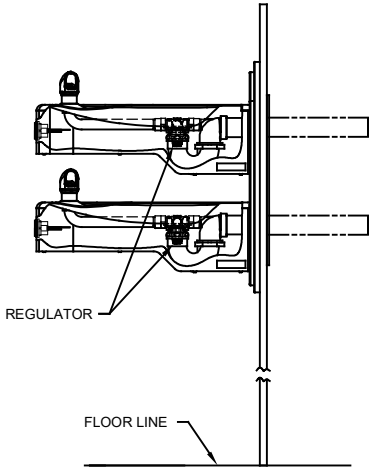

MODEL 1117LHO2 SHOWN
MODEL 1117LHO ON SHEET 1
(SEE SHEET 1 FOR APPLICABLE ROUGH-IN DIMENSIONS)

Haws®
1455 KLEPPE LANE
SPARKS, NEVADA 89431
(775) 359-4712 FAX (775) 359-7424
E-MAIL: HAWS@HAWSCO.COM
WEBSITE: WWW.HAWSCO.COM

ECN NO. 5712	REVISED PER ECN: 5893	BY: FV	MODEL(S) 1117LHO/1117LHO2	PART NUMBER 0510001209.D
DRAWN: FV	DATE: 07/21/21	CHK'D.: KM		REVISION 2
APPROVED: FV	DATE: 09/06/23		SCALE: 1:2 / DRAWING TYPE: INSTALLATION / SIZE: A	SHEET 2 OF 3

PAGE 7 OF 8

©2023 Haws Corporation - All Rights Reserved. HAWS® and other trademarks used in these materials are the exclusive property of Haws Corporation.

THIS DOCUMENT IS TRUE AND CORRECT AT TIME OF PUBLICATION. CONTINUED PRODUCT IMPROVEMENTS MAKE SPECIFICATIONS AND MEASUREMENTS SUBJECT TO CHANGE WITHOUT NOTICE.

NOTES:

8 FIGURES 1 AND 2 ARE REVERSIBLE. CAN BE RIGHT OR LEFT SIDE HIGH.

9 USE SHADED HOLES TO MOUNT AT INDICATED POSITIONS BASED ON COMBINATION SELECTED (FIGS. 1 THRU 3).

10 MAXIMUM ADJUSTABLE RANGE IS 15° FROM PARALLEL TO BACK WALL.

11. REFER TO SHEET 1 OF 3, NOTE 4, FOR INSTALLED FOUNTAIN DIMENSIONS.

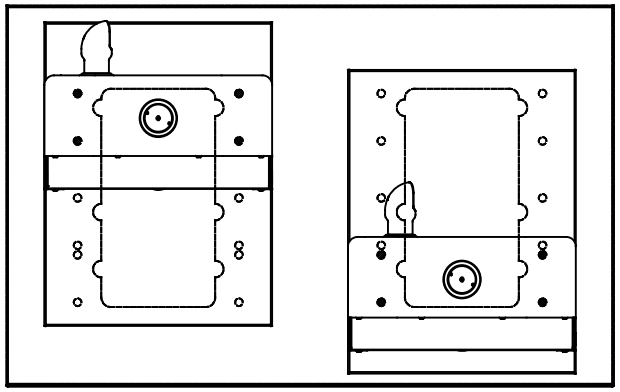

8

FIGURE 1.
ADULT STANDING/CHILD WHEELCHAIR

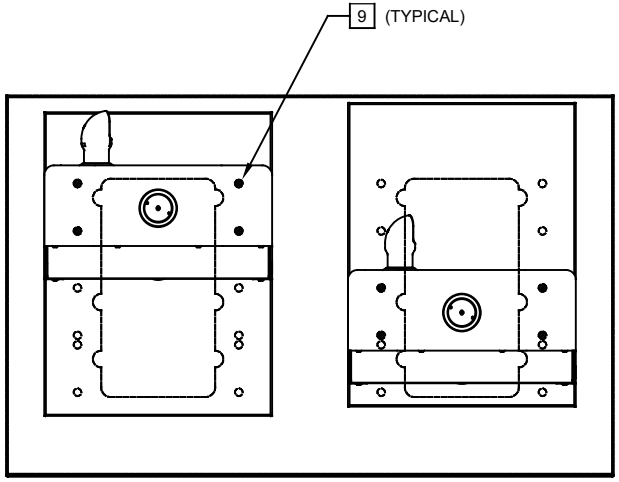

8

FIGURE 2.
ADULT STANDING/ADULT WHEELCHAIR

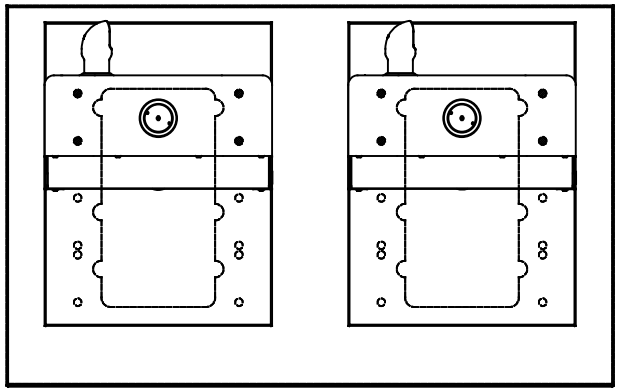

FIGURE 3.
ADULT STANDING/ADULT STANDING

BOWL MOUNTING PATTERNS

Haws®
1455 KLEPPE LANE
SPARKS, NEVADA 89431
(775) 359-4712 FAX (775) 359-7424
E-MAIL: HAWS@HAWSCO.COM
WEBSITE: WWW.HAWSCO.COM

ECN NO.	REVISED PER	BY:	MODEL(S)	PART NUMBER
5712	ECN: 5893	FV	1117LHO/1117LHO2	0510001209.D
DRAWN: FV	DATE: 07/21/21	CHK'D.: KM		REVISION 2
APPROVED: FV	DATE: 09/06/23			

SCALE: 1:2 | DRAWING TYPE: INSTALLATION | SIZE: A | SHEET 3 OF 3

©2023 Haws Corporation - All Rights Reserved. HAWS® and other trademarks used in these materials are the exclusive property of Haws Corporation.