REVISIONS				
REV	DESCRIPTION	ECN	DATE	BY
1	INITIAL RELEASE	5589	9/17/20	IR

NOTES:

1. DIMENSIONS IN INCHES.
2. ALL TOLERANCES: ±1/2"
4. ESTIMATED WEIGHT:
   DRY: 1200 LB
   WET: 3900 LB
5. AREA CLASSIFICATION: ORDINARY
6. AVAILABLE AMBIENT TEMPERATURE RANGE: 35°F-120°F
7. NOT ALL FEATURES ARE STANDARD

NOTES FOR PUMP UNITS ONLY

8. RECOMMENDED RECIRCULATION FLOWRATE: 10GPM
9. PRESSURE TRANSMITTER SETPOINT IS TYPICALLY SET TO 30PSI + ELEVATION CHANGE FROM SKID TO HIGHEST SHOWER (1FT = .433PSI)
10. A BACK PRESSURE REGULATOR IS REQUIRED FOR THE FOLLOWING CONDITION: SUPPLY PRESSURE < 30PSI + ELEVATION CHANGE FROM SKID TO HIGHEST SHOWER

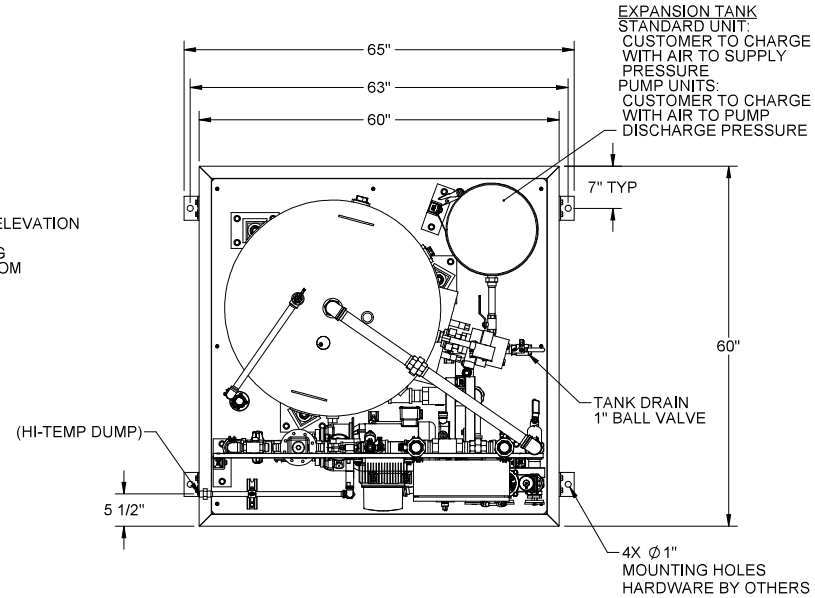

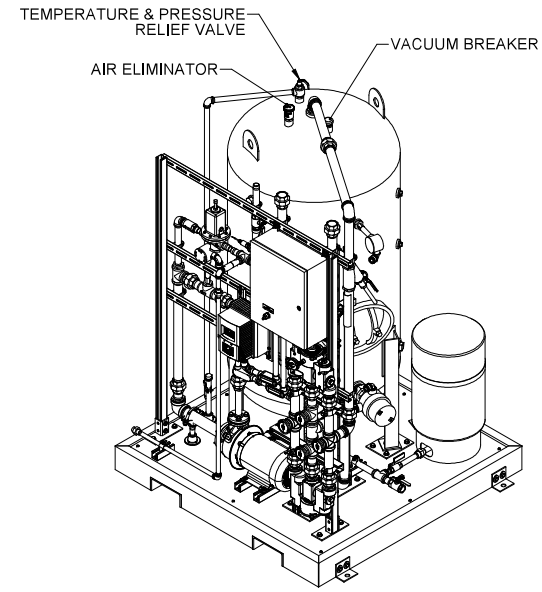

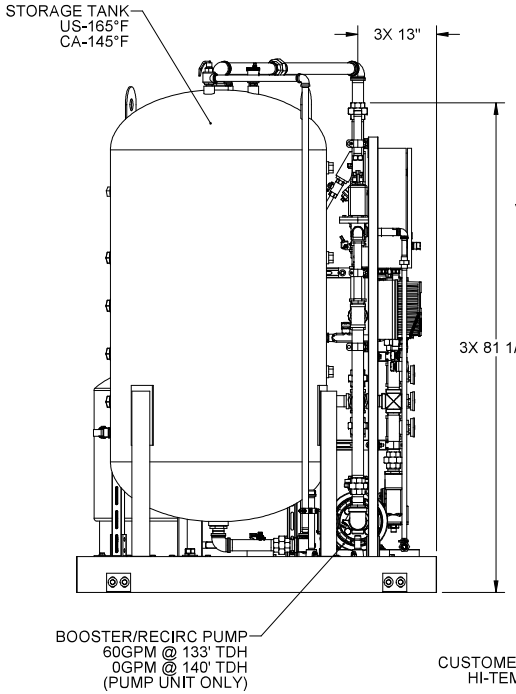

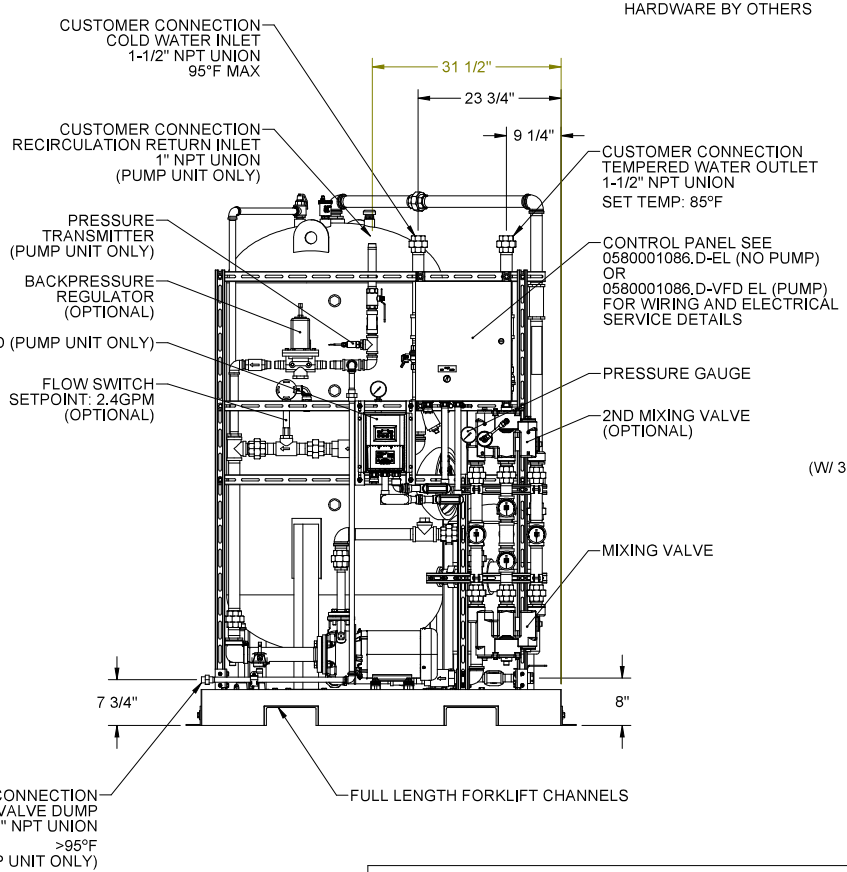

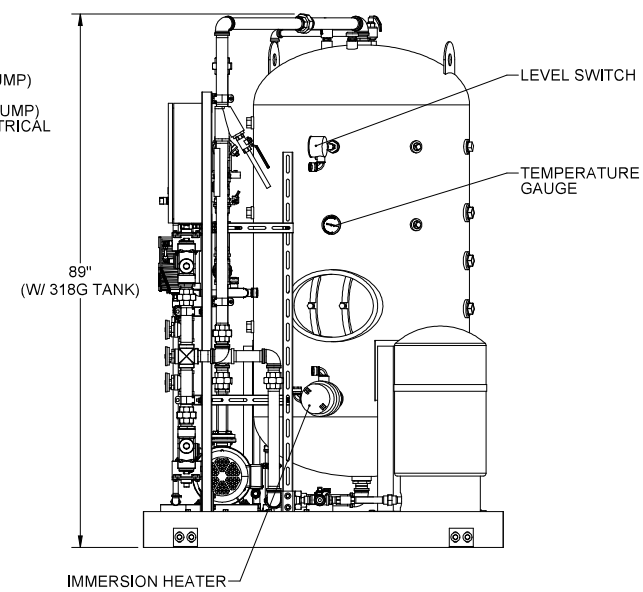

THE ATTACHED DESIGNS ARE CONSIDERED TRADE SECRETS AND POTENTIALLY PATENTABLE. IN ACCORDANCE WITH CONFIDENTIALITY AND NON-DISCLOSURE AGREEMENT, THESE DESIGNS IN ACTUAL OR CONCEPTUAL FORMS CANNOT BE DISCLOSED, REPRODUCED OR USED WITHOUT HAWS' EXPRESS WRITTEN CONSENT.

CUSTOMER INFO/TAG #:	
JOB NUMBER:	
DRAWN BY:	
DRAWN DATE:	
CHECKED BY:	DB
CHECKED DATE:	09/22/20
APPROVED BY:	DB
APPROVAL DATE:	09/22/20

Haws® 1455 KLEPPE LANE SPARKS, NEVADA 89431 USA

TITLE: INDOOR EMERGENCY WATER TEMPERING SKID

NOTICE OF PROPRIETARY INFORMATION
INFORMATION CONTAINED HEREIN IS THE SOLE PROPERTY OF HAWS CORPORATION AND THIS DOCUMENT AND THE DATA DISCLOSED HEREIN OR HEREWITH IS NOT TO BE REPRODUCED, USED, OR DISCLOSED IN WHOLE OR IN PART TO ANYONE WITHOUT THE PERMISSION OF HAWS CORPORATION.

THIRD ANGLE PROJECTION

GA | SH 1 OF 1

SCALE	SIZE	PART NO.	REV.
1:16	C	0580001086.D-GA	1

© 2020 Haws Corporation - All Rights Reserved. HAWS® and other trademarks used in these materials are the exclusive property of Haws Corporation.