model H1011.8

ADA Chilled Vandal-Resistant Wall-Mount Fountain

FEATURES & BENEFITS

CONSTRUCTION

Rugged ADA accessible 18 gauge Type 304 Stainless Steel swirl design bowl, 14 gauge Type 304 Stainless Steel bracket, and a vandal-resistant bottom plate provides a long lasting unit with added peace of mind.

BUBBLER HEADS

Polished chrome-plated brass bubbler heads with integral laminar flow prevents splashing while providing a superior flow pattern. The integral 11/16" dia. basin shank and stainless anti-rotation roll pin for vandal resistance strength. Shielded, angled stream opening provides a steady source of drinking water at .45 gpm.

DRINKING FOUNTAIN VALVES

The push-button activated valves offers the only all stainless steel valve body that is machined out of solid bar stock, is fully serviceable through the front of the push button assembly offering access to the water control cartridge and integral water supply strainer, and with front access to the water stream height adjustment for easy maintenance without having to remove the valve. Operating pressure range of 30 to 90 psi (2.1 to 6.2 bar).

VANDAL RESISTANT

The bubbler heads, push buttons, round bowls, drain strainers and bottom plates are locked in place, discouraging unwanted vandal tampering.

MOUNTING

Heavy-duty 16-gauge galvanized steel mounting frame with welded-in heavy-duty 10 gauge mounting plate with pre-punched mounting holes. Further convenience is given to the chiller with the integral fold-out shelf.

OPTIONS

- Bottle Filler: Model 1920, bottle filler can be a stand-alone station, or mounted above Haws 1011 series drinking fountain models.
- Bottle Filler Stand: Model BTL1001, add-on stainless steel stand to place bottle on when 1920 bottle filler is used.
- Back Panel: Model BP32, satin finish stainless steel 32" back panel for model 1920 bottle filler.
- Custom Logo Panel: Model 6475, Hydration By Haws" logo panel with customization options.

For more information, visit www.hawsco.com or call (888) 640-4297.

SPECIFICATIONS

Model H1011.8 electric vandal-resistant wall mounted barrier-free water cooler shall include dual 18 gauge Type 304 Stainless Steel satin finish basins with integral swirl design, 14 gauge Type 304 Stainless Steel wall bracket, 100% lead-free waterways, vandal-resistant push-button operated stainless steel valves with front-accessible cartridge and flow adjustment, polished chrome-plated brass vandal-resistant bubbler heads with integral laminar anti-squirt flow, chrome-plated brass vandal-resistant waste strainers, vandal-resistant bottom plates, stainless steel satin finish back panel and louvered intrusion-proof grill, high and low fountain mounting levels, and 1-1/4" (3.2 cm) O.D. waste pipe. The R-134a refrigeration system is hermetically sealed and delivers a minimum of 8 gph (30.3 L) of water at 50° F (10° C) cooled from 80° F (26.7° C) inlet water at 90° F (32.2° C) ambient. 115 Volts, 60Hz, rated watts: 370, full load amps: 5.

REQUIRES MODEL HCR8 AND MTGFR.LG PRICED SEPARATELY.

APPLICATIONS

Specifically, this type fountain may be placed in settings such as: schools, office buildings, shopping malls, and other indoor environments where there is a demand for a chilled water source and/or wheelchair access. Electric water coolers are not recommended or designed for outdoor applications or enclosed pool areas (chlorine). These conditions may void warranty. Model meets all current Federal Regulations for the disabled including those in the Americans with Disabilities Act. Haws manufactures drinking fountains, faucets and electric water coolers to be lead-free by all known definitions including NSF/ANSI/CAN 61-Section 9, NSF/ANSI/CAN 372, California Proposition 65, and the Federal Safe Drinking Water Act. Product is compliant to California Health and Safety Code 116875 (AB 1953-2006), and 116876 (AB 100) “NSF/ANSI/CAN 61: Q ≤ 1”. Haws electric water coolers comply with ARI Standard 1010 and ANSI A117.1, and are listed by Underwriter Laboratories to U.S. and Canadian standards.

DISCLAIMER: Continued product improvements make specifications subject to change without notice. Check www.hawsco.com for the latest product information and updates.

THIS DOCUMENT IS TRUE AND CORRECT AT TIME OF PUBLICATION. CONTINUED PRODUCT IMPROVEMENTS MAKE SPECIFICATIONS AND MEASUREMENTS SUBJECT TO CHANGE WITHOUT NOTICE.

NOTES:

1. HOLD ROUGH-IN DIMENSIONS ±1/8" (3.2mm).
2. WHEN INSTALLING THIS UNIT, LOCAL, STATE, OR FEDERAL CODES SHOULD BE ADHERED TO. FOR DIMENSIONS (LOCATIONS), WASTE AND SUPPLY REQUIREMENTS OTHER THAN SHOWN, DIMENSIONS MARKED (*) MUST BE ADJUSTED ACCORDINGLY.
3. INSTALLER MUST PROVIDE TRAP FOR PROPER INSTALLATION.

4 REFER TO 5874 SERIES OPERATION AND MAINTENANCE MANUAL FOR PUSH BUTTON AND VALVE INSTALLATION/MAINTENANCE INSTRUCTIONS.

5 REFER TO MTGFR.LG INSTALLATION DRAWING FOR ROUGH-IN DIMENSIONS.

6 INSERT 5/16"-18 PANEL INSERTS FROM OPPOSITE SIDE AT LOCATONS SHOWN BY DARKENED HOLES. HOLE COMBINATIONS SHOWN ARE FOR USE WITH LOW FOUNTIAN ON THE RIGHT AND THE HI FOUNTAIN ON THE LEFT. USE OPPOSITE HOLES FOR HI ON RIGHT AND LOW ON LEFT.

7 HOLE COMBINATION SHOWN BELOW IS FOR USE WITH LOW FOUNTAIN ON THE RIGHT AND HIGH FOUNTAIN ON THE LEFT. USE OPPOSITE HOLES FOR HIGH ON RIGHT AND LOW ON LEFT.

8 TO CHANGE FOUNTAIN MTG. SCREW LOCATIONS: FIRST REMOVE SCREWS AND THEN SQUEEZE CLIPS ON NUT RETAINER TO POP OUT. SNAP INTO NEW POSITIONS AND RE-ASSEMBLE SCREWS.

9 IMPORTANT: A L.H. LOW (OPTIONAL) CONFIGURATION WILL REQUIRE A DIFFERENT BACK PANEL AND THE WASTE AND SUPPLY DIMENSIONS SHOWN (*) MUST BE REVERSED.

10 ALIGN HOLES IN CHILLER SUPPORT TRAY WITH HOLES IN FRAME AND FASTEN WITH #10 SHEET METAL SCREWS.

11 MAXIMUM ADJUSTABLE RANGE IS 15° FROM PARALLEL TO BACK WALL.

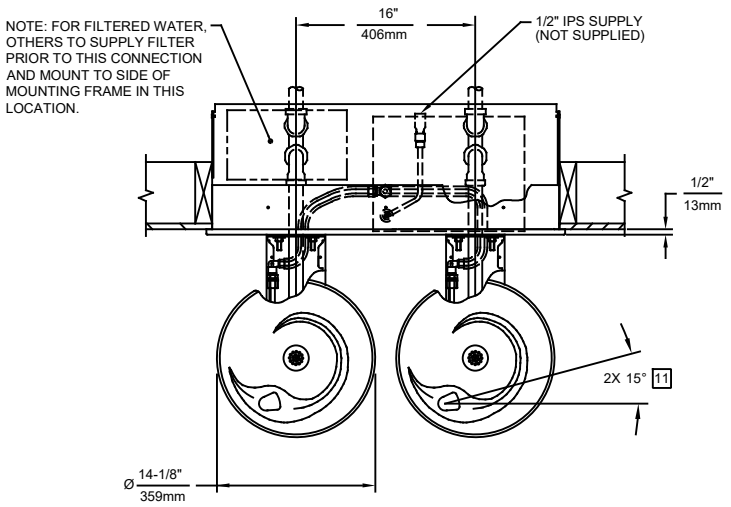

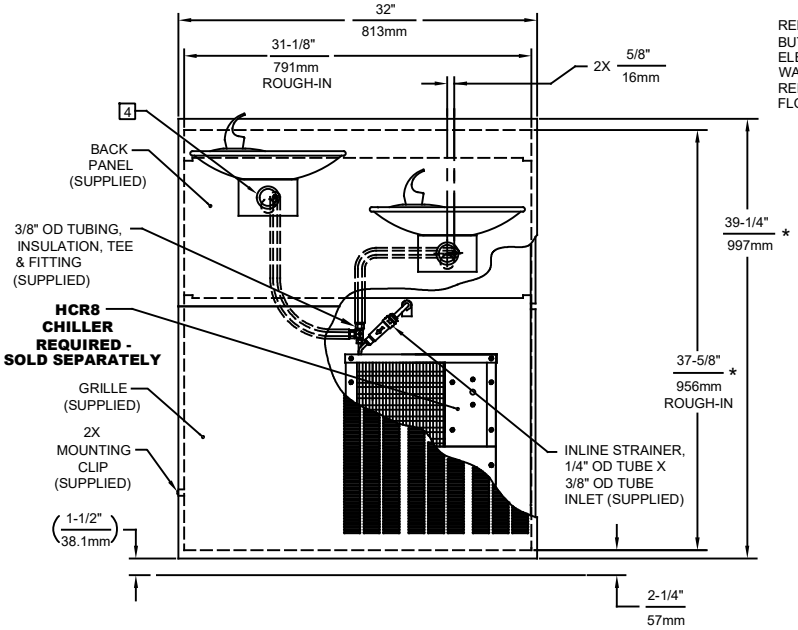

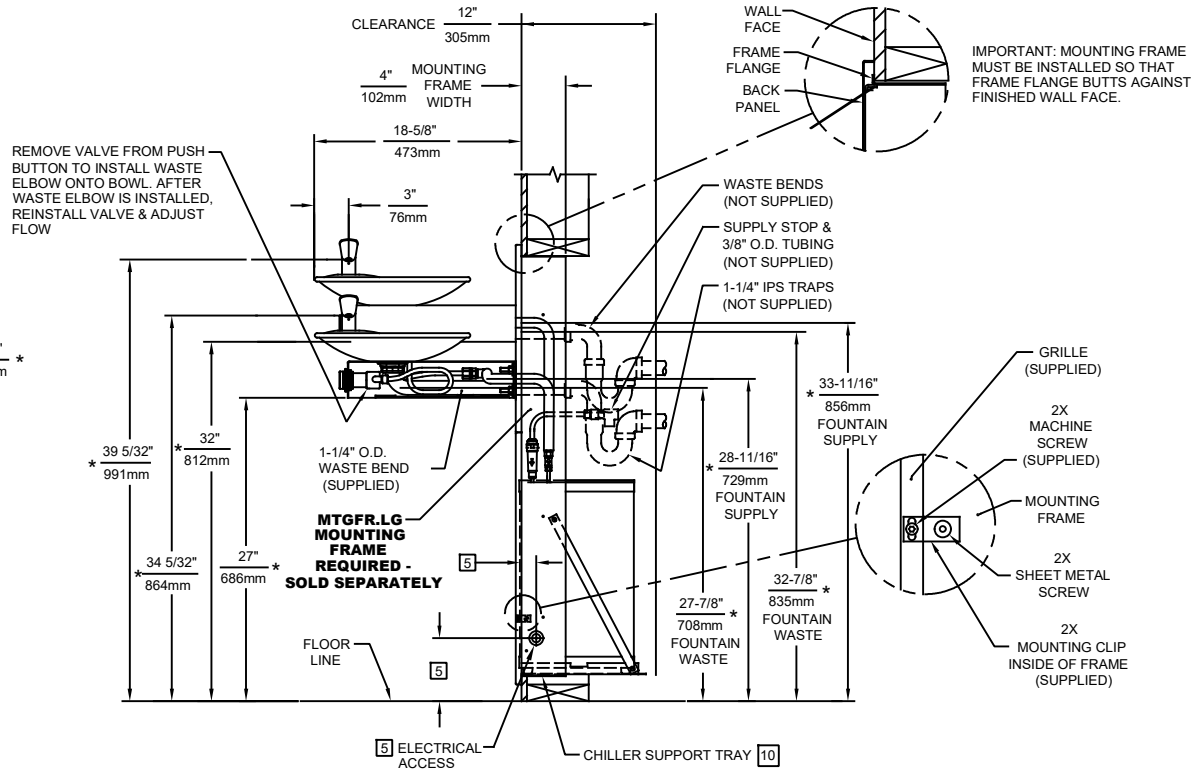

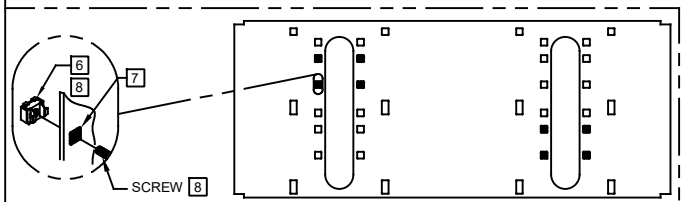

BOWL MOUNTING PATTERN DETAIL

Haws®
1455 KLEPPE LANE
SPARKS, NEVADA 89431
(775) 359-4712 FAX (775) 359-7424
E-MAIL: HAWS@HAWSCO.COM
WEBSITE: WWW.HAWSCO.COM

ECN NO.	REVISED PER ECN: 5893	BY: FV	MODEL(S)	PART NUMBER
DRAWN: RTM	DATE: 07/97	CHK'D.: KM	H1011.8/H1011.8HPS	0002080249.D
APPROVED: FV	DATE: 09/06/23			REVISION 24
SCALE: 1/18	DRAWING TYPE: INSTALLATION		SIZE: A	SHEET 1 OF 1

©2023 Haws Corporation - All Rights Reserved. HAWS® and other trademarks used in these materials are the exclusive property of Haws Corporation.