INSTALLATION, OPERATION & MAINTENANCE INSTRUCTIONS

1455 Kleppe Lane ◆Sparks, NV 89431-6467 ◆(775) 359-4712 ◆Fax (775) 359-7424
E-mail: haws@hawsco.com ◆ website: www.hawsco.com

No. 2080121(11)

Model 8123HPCP
Shower

NOTE TO INSTALLER: Please leave this information with the Maintenance Department.

LIMITED WARRANTY

HAWS® warrants that all of its products are guaranteed against defective material or poor workmanship for a period of **one year from date of shipment.** HAWS liability under this warranty shall be discharged by furnishing without charge F.O.B. HAWS Factory any goods, or part thereof, which shall appear to the Company upon inspection to be of defective material or not of first class workmanship, provided that claim is made in writing to company within a reasonable period after receipt of the product. Where claims for defects are made, the defective part or parts shall be delivered to the Company, prepaid, for inspection. HAWS will not be liable for the cost of repairs, alterations or replacements, or for any expense connected therewith made by the owner or his agents, except upon written authority from HAWS, Sparks, Nevada. HAWS will not be liable for any damages caused by defective materials or poor workmanship, except for replacements, as provided above. Buyer agrees that Haws has made no other warranties either expressed or implied in addition to those above stated, except that of title with respect to any of the products or equipment sold hereunder and that HAWS shall not be liable for general, special, or consequential damages claimed to arise under the contract of sale.

The emergency equipment manufactured by HAWS is warranted to function if installation and maintenance instructions provided are adhered to. The units also must be used for the purpose, which they were intended. This product is intended to supplement first-aid treatment. Due to widely varying conditions HAWS cannot guarantee that the use of this emergency equipment will prevent serious injury or the aggravation of existing or prior injuries.

NO OTHER WARRANTIES EXPRESSED OR IMPLIED ARE AUTHORIZED, PROVIDED OR GIVEN BY HAWS.

SHOULD YOU EXPERIENCE DIFFICULTY WITH THE INSTALLATION OF THIS MODEL PLEASE CALL:

TECHNICAL SUPPORT: 1-800-766-5612

FOR CUSTOMER SERVICE: 1-888-640-4297

LOCATION OF UNIT: The Model 8123HPCP Emergency Shower should be installed in close proximity to potential accident areas. It should be clearly identified free from obstructions and easy to access.

SUPPLY LINE: The minimum recommended line size is 1” IPS with 30-90 psi (2-6 ATM) flowing pressure. Where sediment or mineral content is a problem, an inlet filter is recommended.

PLUMBING CONNECTIONS: Inlet supply is female 1” IPS.

TROUBLESHOOTING

PROBLEM	REPAIR CHECKLIST
1. No flow.	1. Check the main shut-off valve.
2. Insufficient water flow at the showerhead.	2. a. Verify minimum 30 psi (2 ATM) flowing supply line pressure.
	b. Probable clogging of flow control inside showerhead. Unscrew showerhead off of elbow and clean rubber flow control.

For more information about Haws products, see our website: www.hawsco.com

© 2010 Haws® Corporation – All Rights Reserved
HAWS® and other trademarks used in these materials are the exclusive property of Haws Corporation.

THIS DOCUMENT IS TRUE AND CORRECT AT TIME OF PUBLICATION. CONTINUED PRODUCT IMPROVEMENTS MAKE SPECIFICATIONS AND MEASUREMENTS SUBJECT TO CHANGE WITHOUT NOTICE.

ITEM	DESCRIPTION

PARTS BREAKDOWN

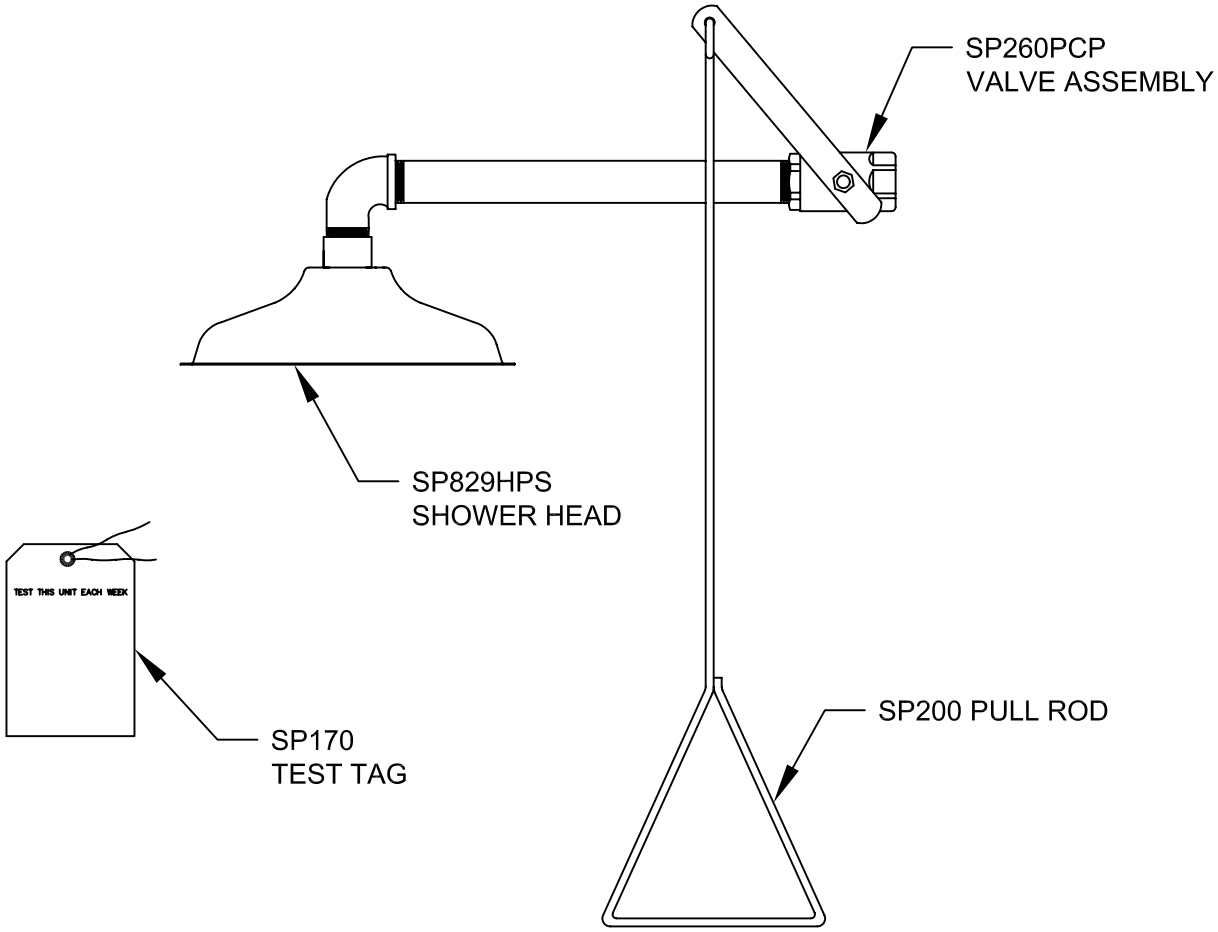

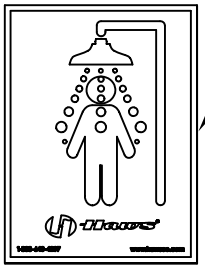

SP177 SHOWER SIGN

Haws®
1455 KLEPPE LANE
SPARKS, NEVADA 89431
(775) 359-4712 FAX (775) 359-7424
E-MAIL: HAWS@HAWSCO.COM
WEBSITE: WWW.HAWSCO.COM

ECN NO.	REVISED PER	BY:	MODEL(S)	PART NUMBER:
.	ECN: 4351	IR	8123HPCP	0002080121
DRAWN: CLF	DATE: 03/08/93	CHK'D.:	OVERHEAD SHOWER	DRAWING NO.: 11476C00 REV. 11
APPROVED:	DATE:		SCALE: 1/3 DRAWING TYPE: PARTS BREAKDOWN SIZE: A	SHEET 1 OF 1

WHEN ORDERING PARTS PLEASE SPECIFY YOUR MODEL NUMBER

©2010 Haws Corporation - All Rights Reserved
HAWS® and other trademarks used in these materials are the exclusive property of Haws Corporation.

THIS DOCUMENT IS TRUE AND CORRECT AT TIME OF PUBLICATION. CONTINUED PRODUCT IMPROVEMENTS MAKE SPECIFICATIONS AND MEASUREMENTS SUBJECT TO CHANGE WITHOUT NOTICE.

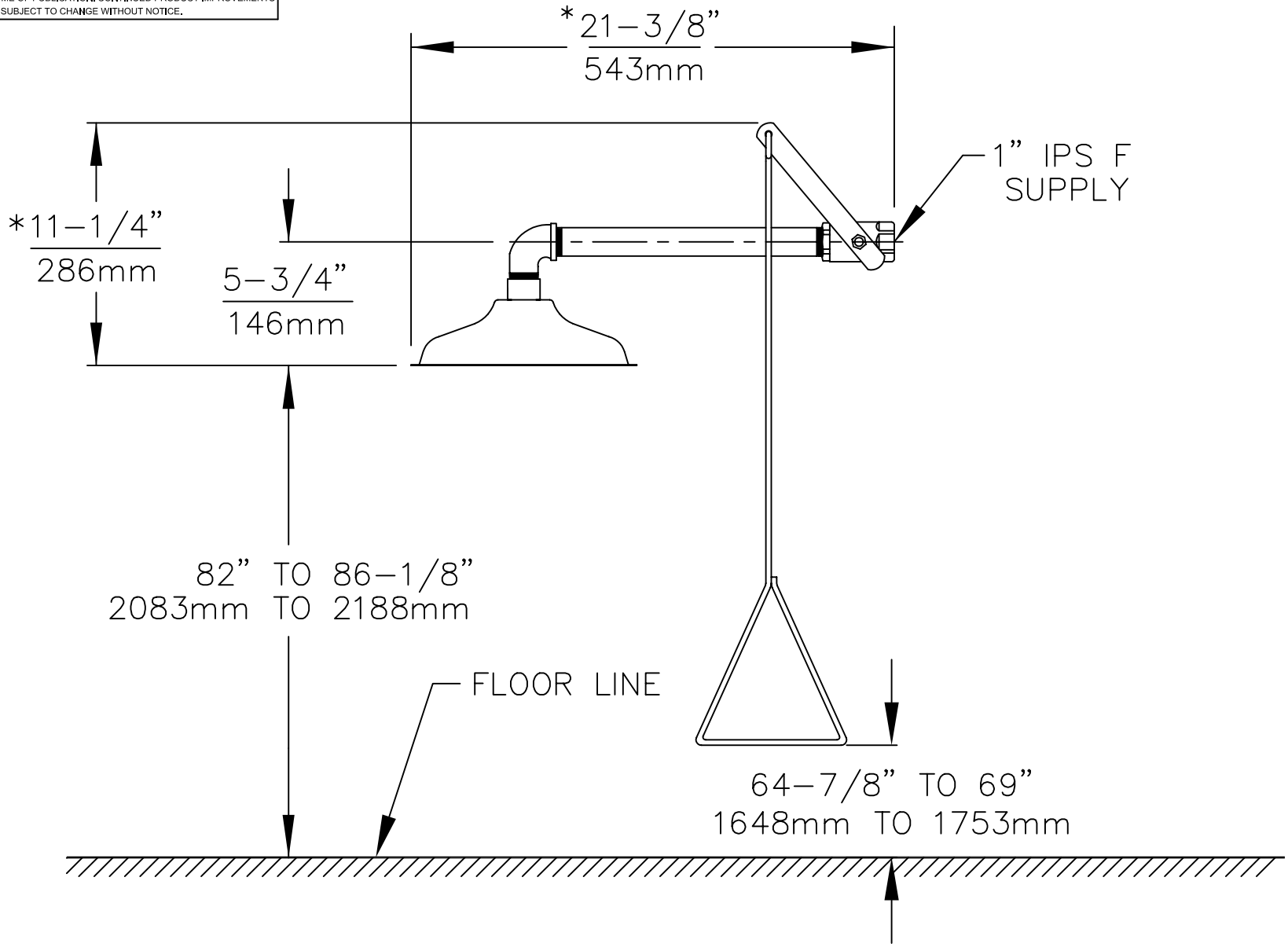

DWG. NO. 06857A00

NOTE:

1. TO COMPLY WITH ANSI Z358.1-2009 FOR EMERGENCY SHOWER EQUIPMENT:
   - UNIT SHALL BE INSTALLED IN ACCORDANCE WITH MANUFACTURER'S INSTRUCTIONS AND ACCEPTABLE PLUMBING PRACTICES.
   - SHOWER SHALL BE POSITIONED SO THAT SHOWER HEAD IS NOT LESS THAN 208.3 CM (82 IN.) NOR MORE THAN 243.8 CM (96 IN.) FROM SURFACE ON WHICH USER STANDS.
   - SHOWER SPRAY PATTERN SHALL HAVE A MINIMUM DIAMETER OF 50.8 CM (20 IN.) AT 152.4 CM (60 IN.) ABOVE SURFACE ON WHICH USER STANDS, AND CENTER OF SPRAY PATTERN SHALL BE LOCATED AT LEAST 40.6 CM (16 IN.) FROM ANY OBSTRUCTION.
2. *DIMENSIONS MAY VARY ±1/2" [12.7mm].

Haws®
1455 KLEPPE LANE
SPARKS, NEVADA 89431
(775) 359-4712 FAX (775) 359-7424
E-MAIL: HAWS@HAWSCO.COM
WEBSITE: WWW.HAWSCO.COM

ECN NO. .	REVISED PER ECN: 4351	BY: IR	MODEL(S) 8123HPCP OVERHEAD SHOWER	PART NUMBER: 0002080121.D
DRAWN: CJL	DATE: 03/10/93	CHK'D.:		DRAWING NO.: 06857A00 REV. 11
APPROVED:	DATE:			
			SCALE: 1/7 DRAWING TYPE: INSTALLATION SIZE: A	SHEET 1 OF 1

©2010 Haws Corporation - All Rights Reserved HAWS® and other trademarks used in these materials are the exclusive property of Haws Corporation.