THIS DOCUMENT IS TRUE AND CORRECT AT TIME OF PUBLICATION. CONTINUED PRODUCT IMPROVEMENTS MAKE SPECIFICATIONS AND MEASUREMENTS SUBJECT TO CHANGE WITHOUT NOTICE.

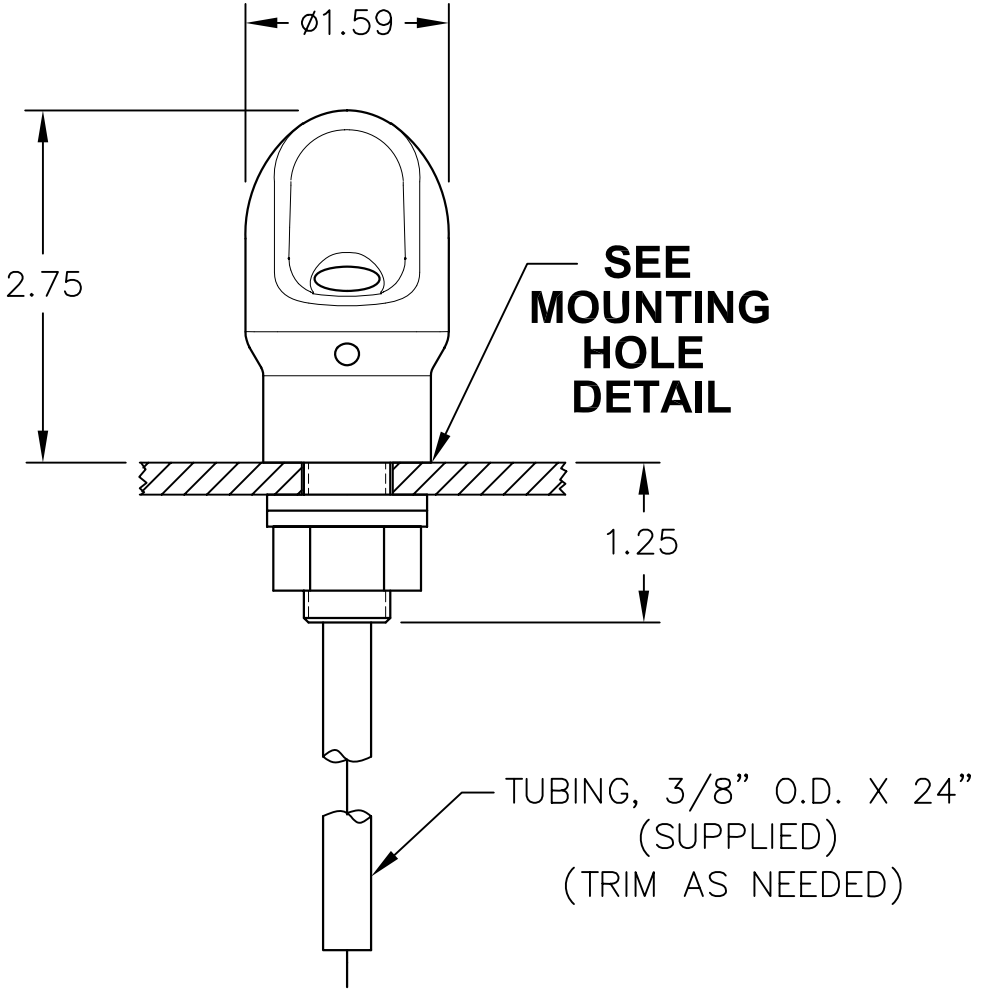

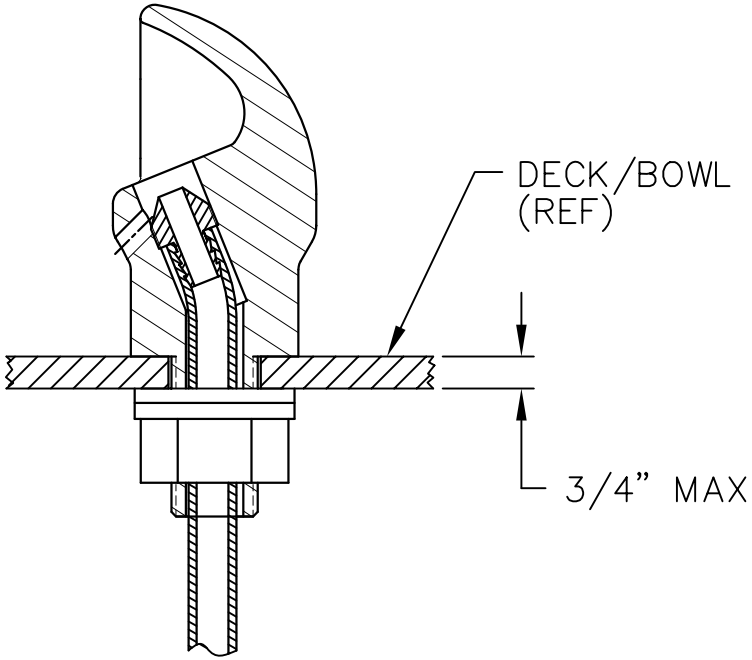

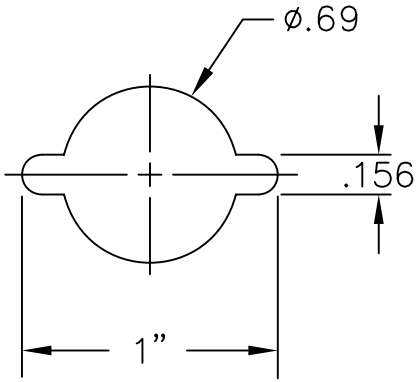

MOUNTING HOLE DETAIL

Haws corporation
1455 KLEPPE LANE
SPARKS, NEVADA 89431
(775) 359-4712 FAX (775) 359-7424
E-MAIL: HAWS@HAWSCO.COM
WEBSITE: WWW.HAWSCO.COM

ECN NO.	REVISED PER	BY:	MODEL(S):	PART NUMBER:
.	ECN: 4246	HM	5703M/5703MA DRINKING FAUCET HEAD	0002077563
DRAWN: C HAYES	DATE: 08/08/93	CHK'D.:	INFO FAX DOC #: 257036/2570362	DRAWING NUMBER: 10886A00 — REV. 5
APPROVED:	DATE:		SCALE: 1.5:1 — DRAWING TYPE: INSTALLATION/FAXBACK	SIZE: A — SHEET 1 OF 1

©2009 Haws Corporation - All Rights Reserved HAWS® and other trademarks used in these materials are the exclusive property of Haws Corporation.