THIS DOCUMENT IS TRUE AND CORRECT AT TIME OF PUBLICATION. CONTINUED PRODUCT IMPROVEMENTS MAKE SPECIFICATIONS AND MEASUREMENTS SUBJECT TO CHANGE WITHOUT NOTICE.

NOTES:

1. HOLD ROUGH-IN DIMENSIONS ± 1/8" (3.2mm).
2. WHEN INSTALLING THIS UNIT, LOCAL, STATE, OR FEDERAL CODES SHOULD BE ADHERED TO FOR INSTALLATION DIMENSIONS (LOCATIONS), WASTE AND SUPPLY REQUIREMENTS OTHER THAN SHOWN.
3. ** INSTALLER MUST PROVIDE TRAP FOR PROPER INSTALLATION.

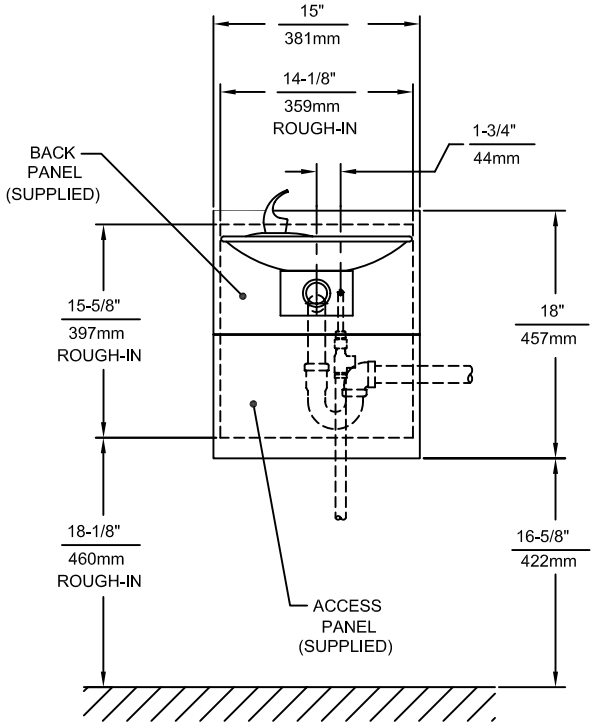

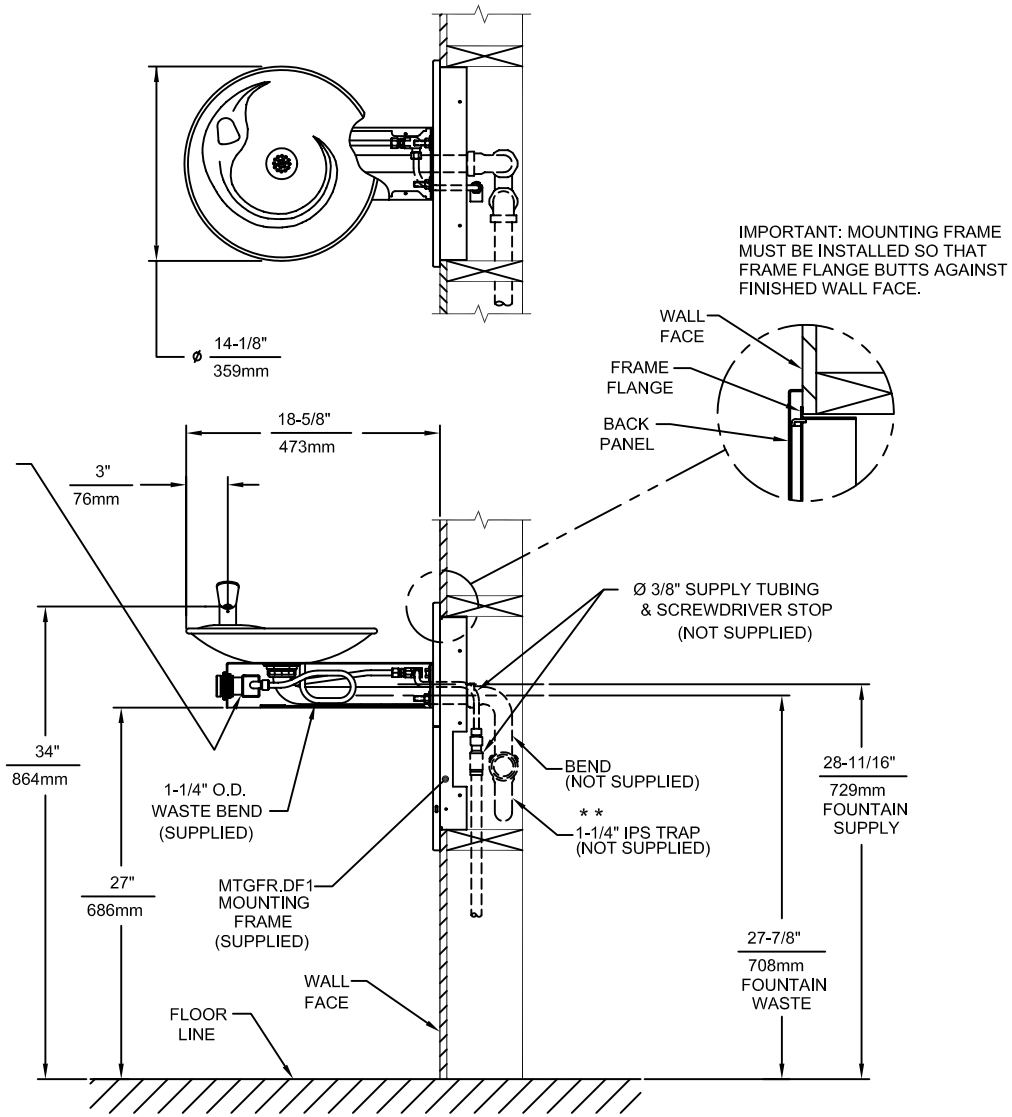

DWG. NO. 14221A00

Haws®
1455 KLEPPE LANE
SPARKS, NEVADA 89431
(775) 359-4712 FAX (775) 359-7424
E-MAIL: HAWS@HAWSCO.COM
WEBSITE: WWW.HAWSCO.COM

ECN NO. .	REVISED PER ECN: 4175	BY: HM	MODEL(S) 1001MS/1001HPSMS DRINKING FOUNTAIN	PART NUMBER: 0002076510.D
DRAWN: PM	DATE: 08/02/99	CHK'D.:		DRAWING NO.: 14221A00 / REV. 6
APPROVED:	DATE:			
			SCALE: 1/14 / DRAWING TYPE: INSTALLATION / SIZE: A	SHEET 1 OF 1

©2010 Haws Corporation - All Rights Reserved HAWS® and other trademarks used in these materials are the exclusive property of Haws Corporation.